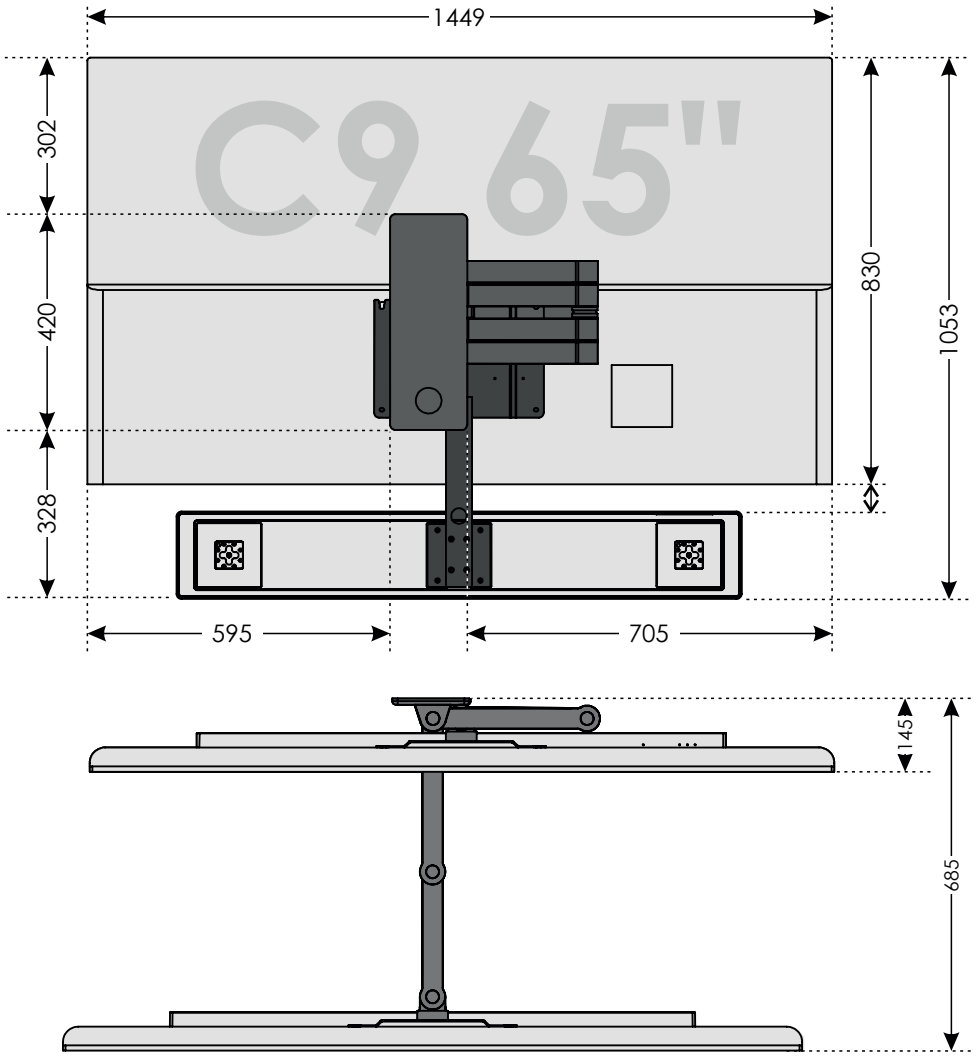

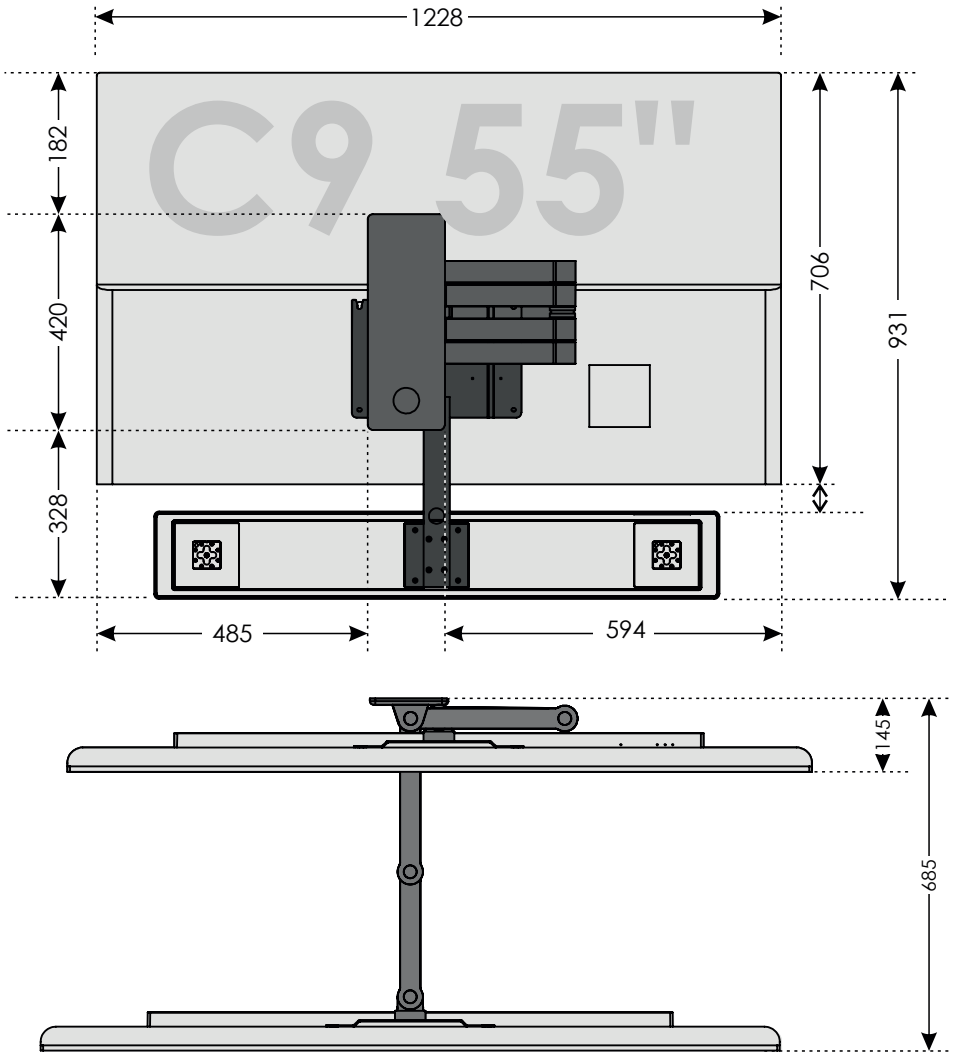

STB

Gyro LG CX/C9 and BeoSound Stage

www.STBbrackets.co.uk
+44 1522 522400

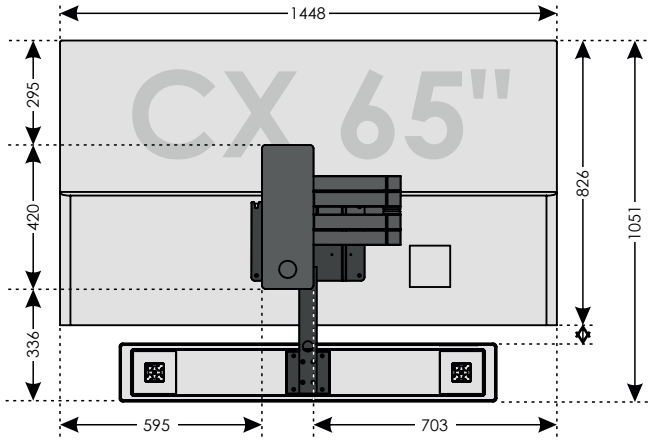

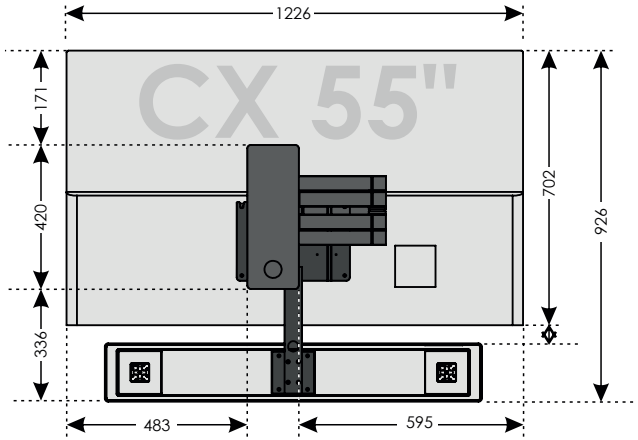

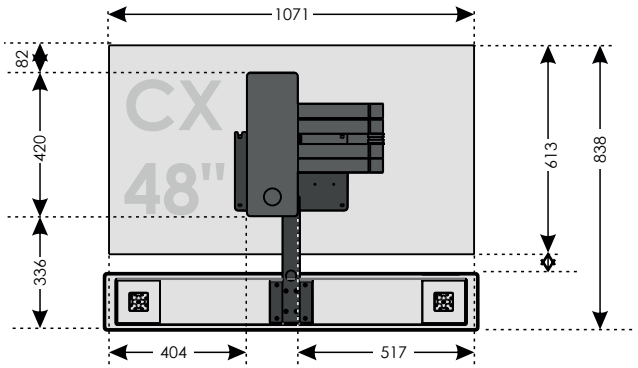

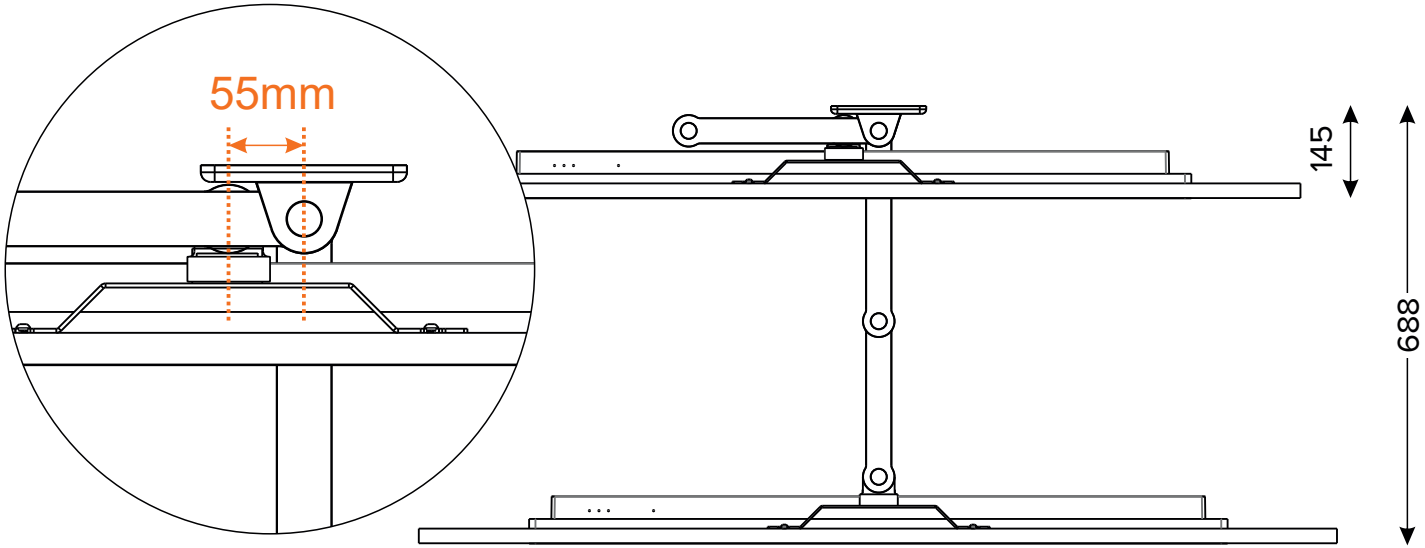

STB

Gyro LG CX/C9 and BeoSound Stage

www.STBbrackets.co.uk
+44 1522 522400

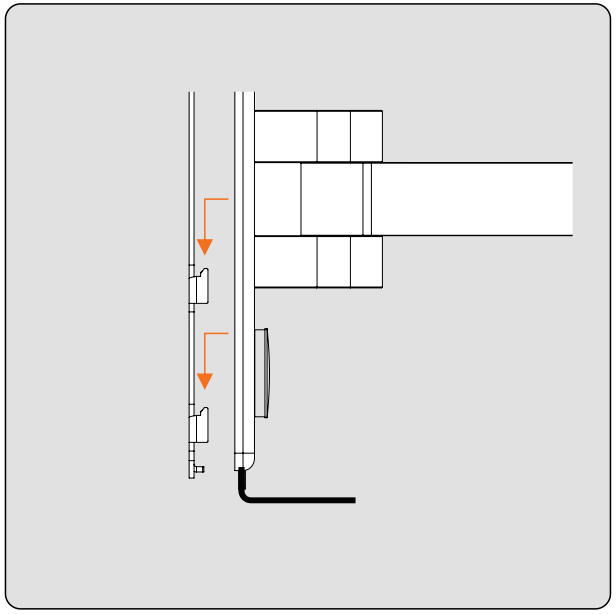

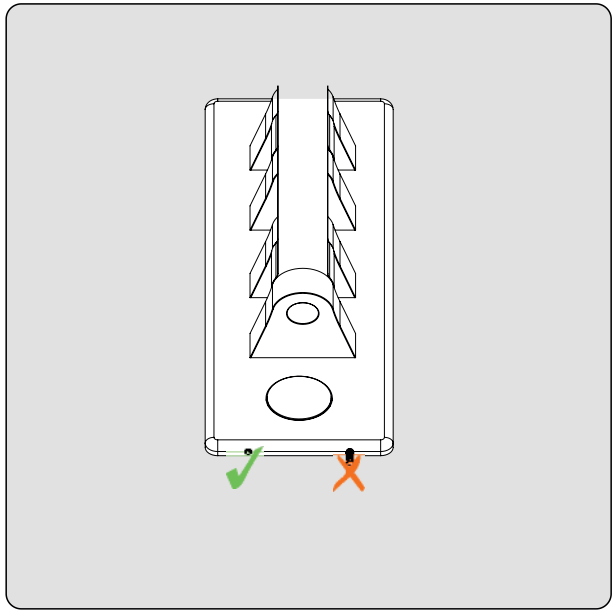

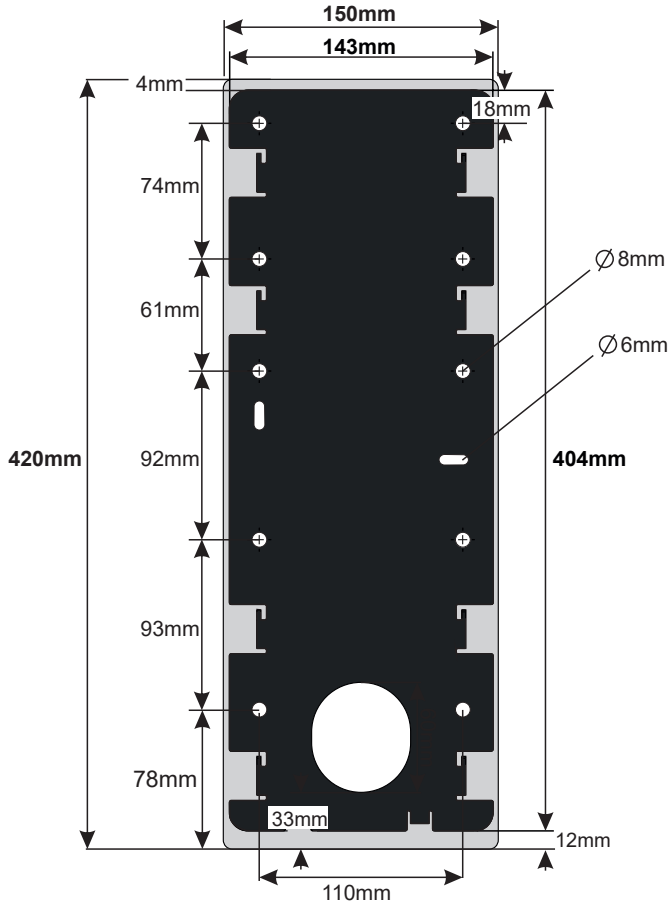

STB

Gyro LG CX/C9 and BeoSound Stage

www.STBbrackets.co.uk
+44 1522 522400

1

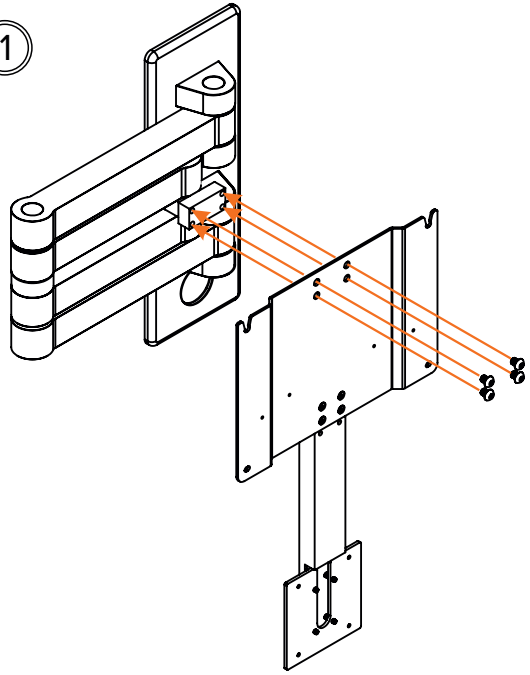

2

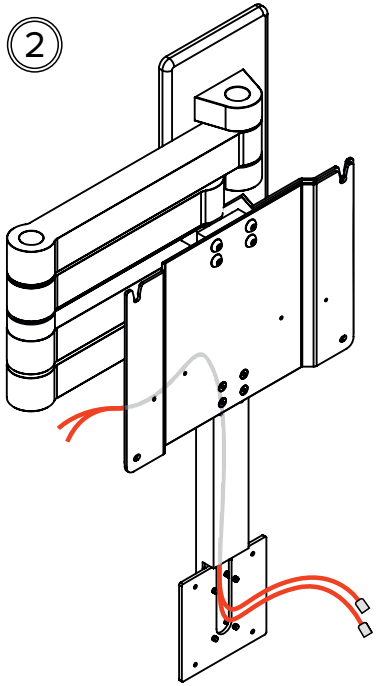

3

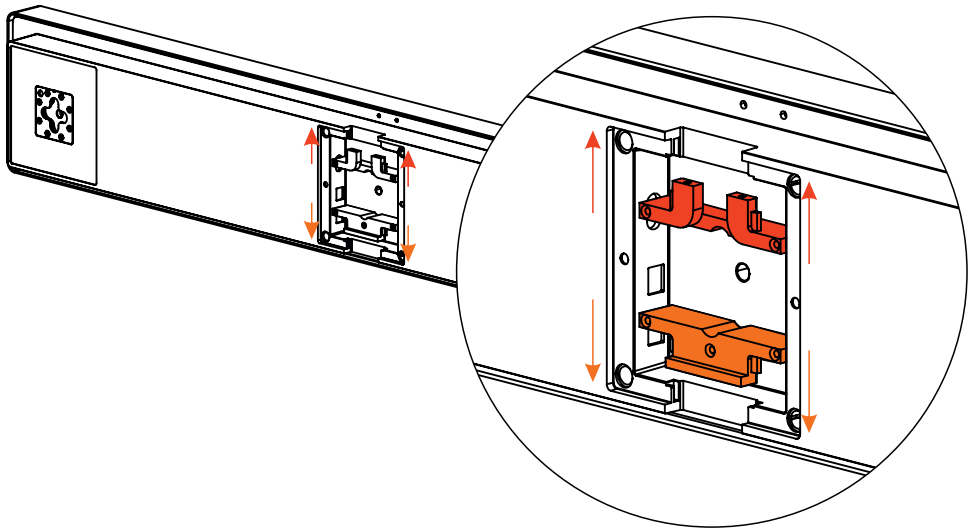

4

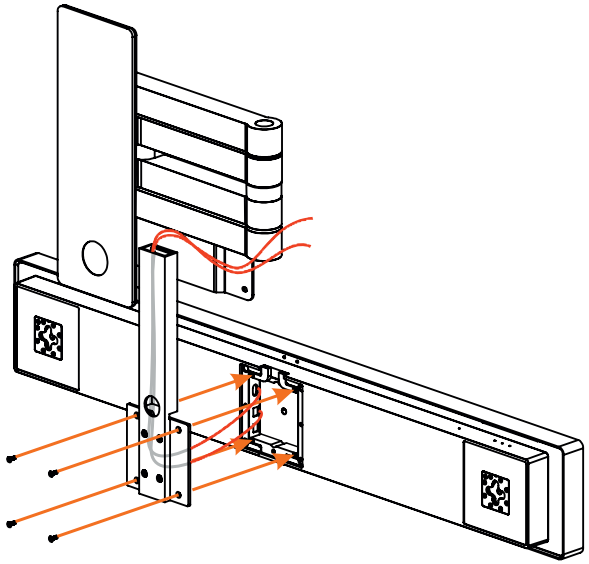

5

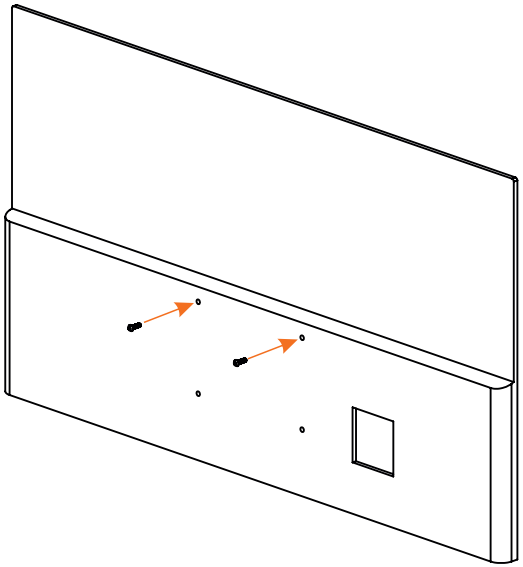

6

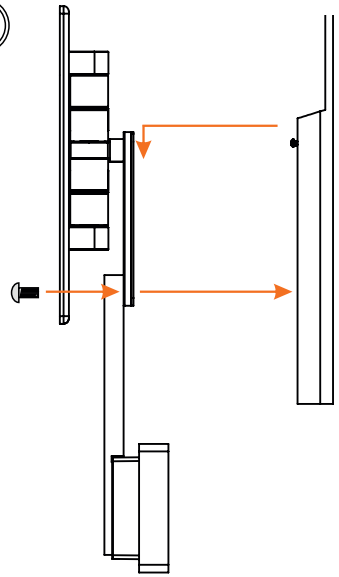

STB

Gyro LG CX/C9 and BeoSound Stage

www.STBbrackets.co.uk
+44 1522 522400