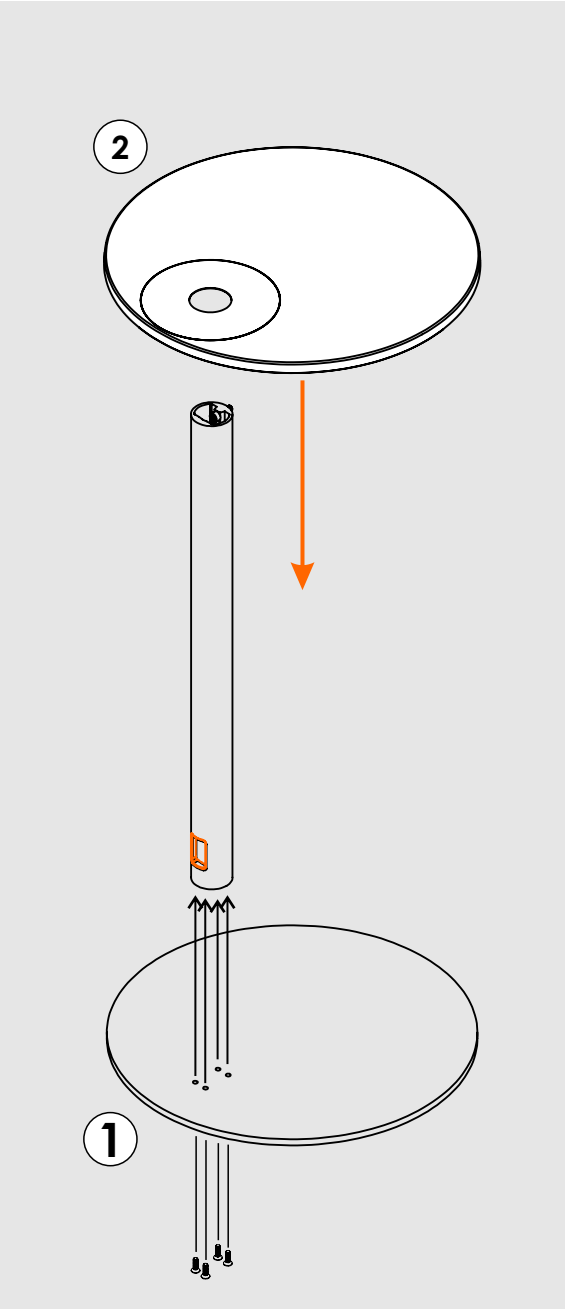

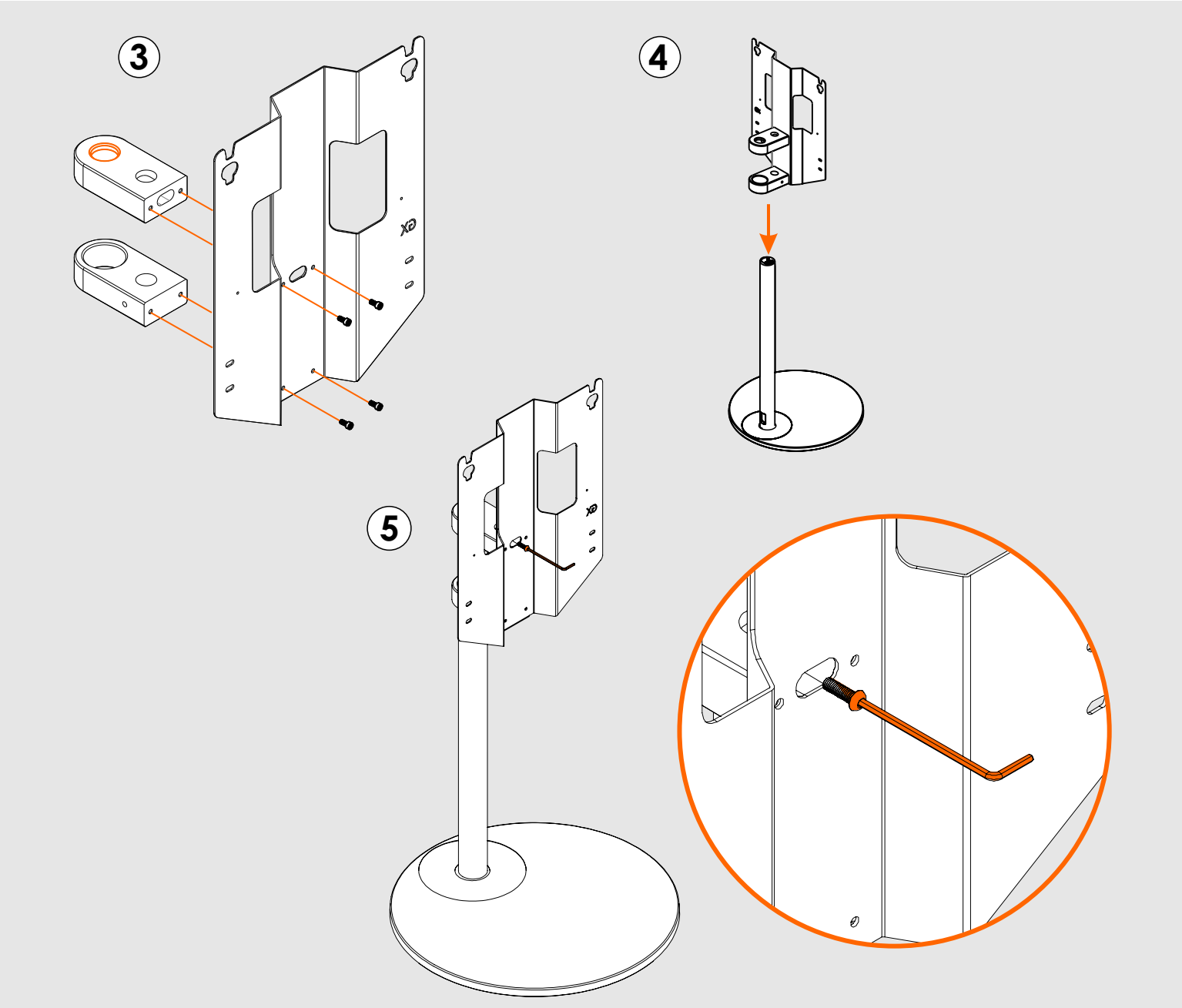

STB

LG 55/65" GX and BeoSound Stage

www.STBbrackets.co.uk
+44 1522 522400

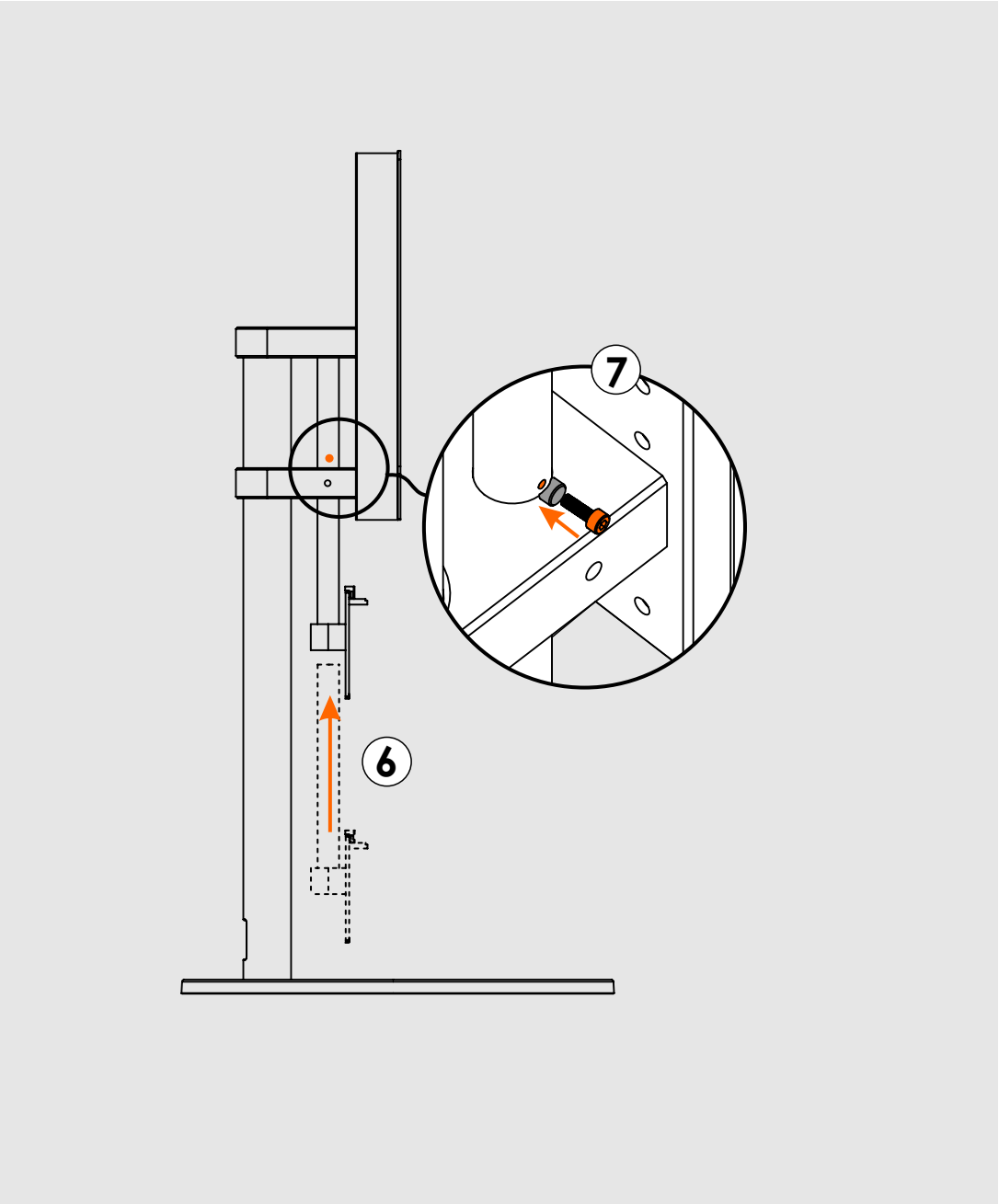

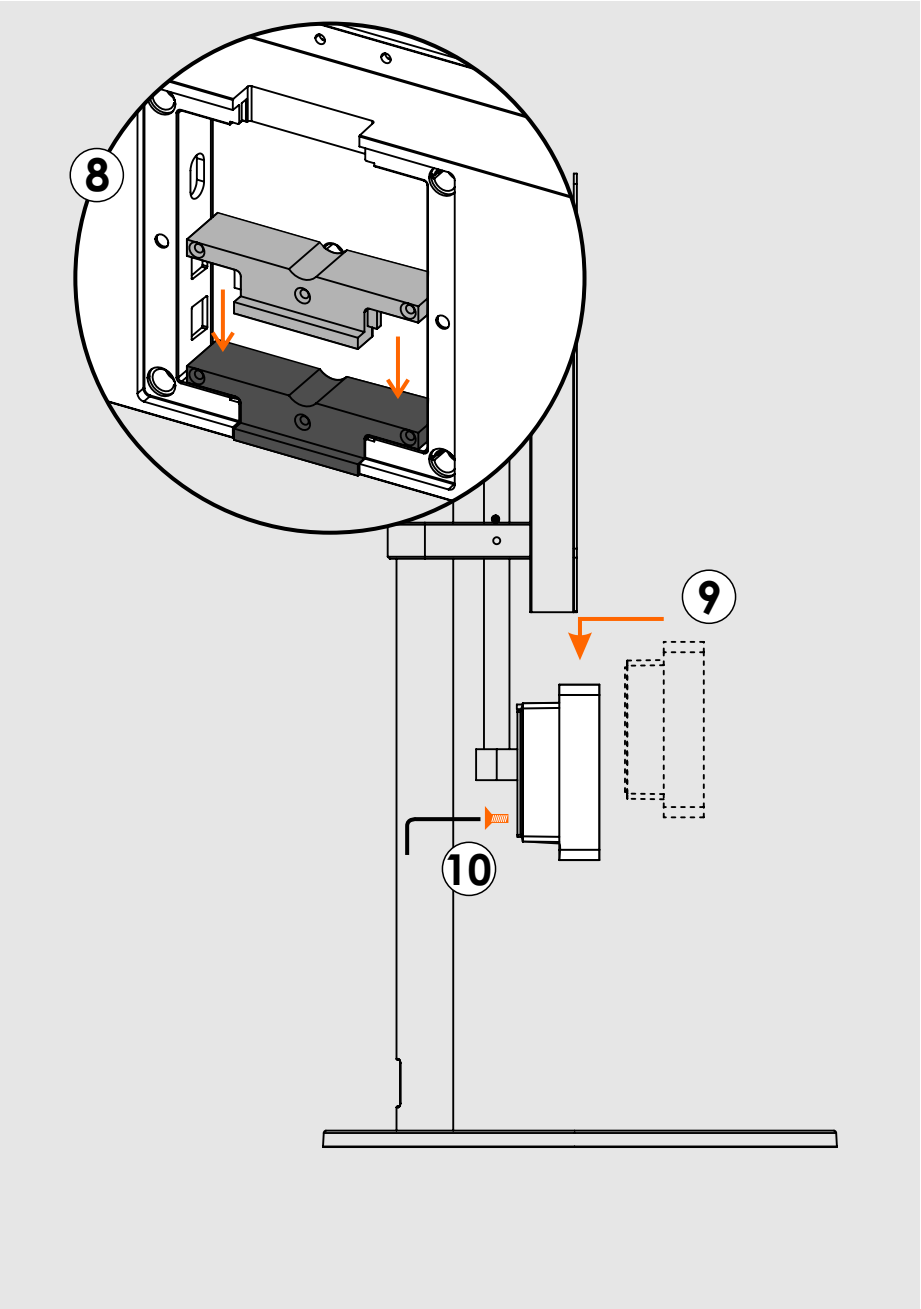

STB

LG 55/65" GX and BeoSound Stage

www.STBbrackets.co.uk
+44 1522 522400

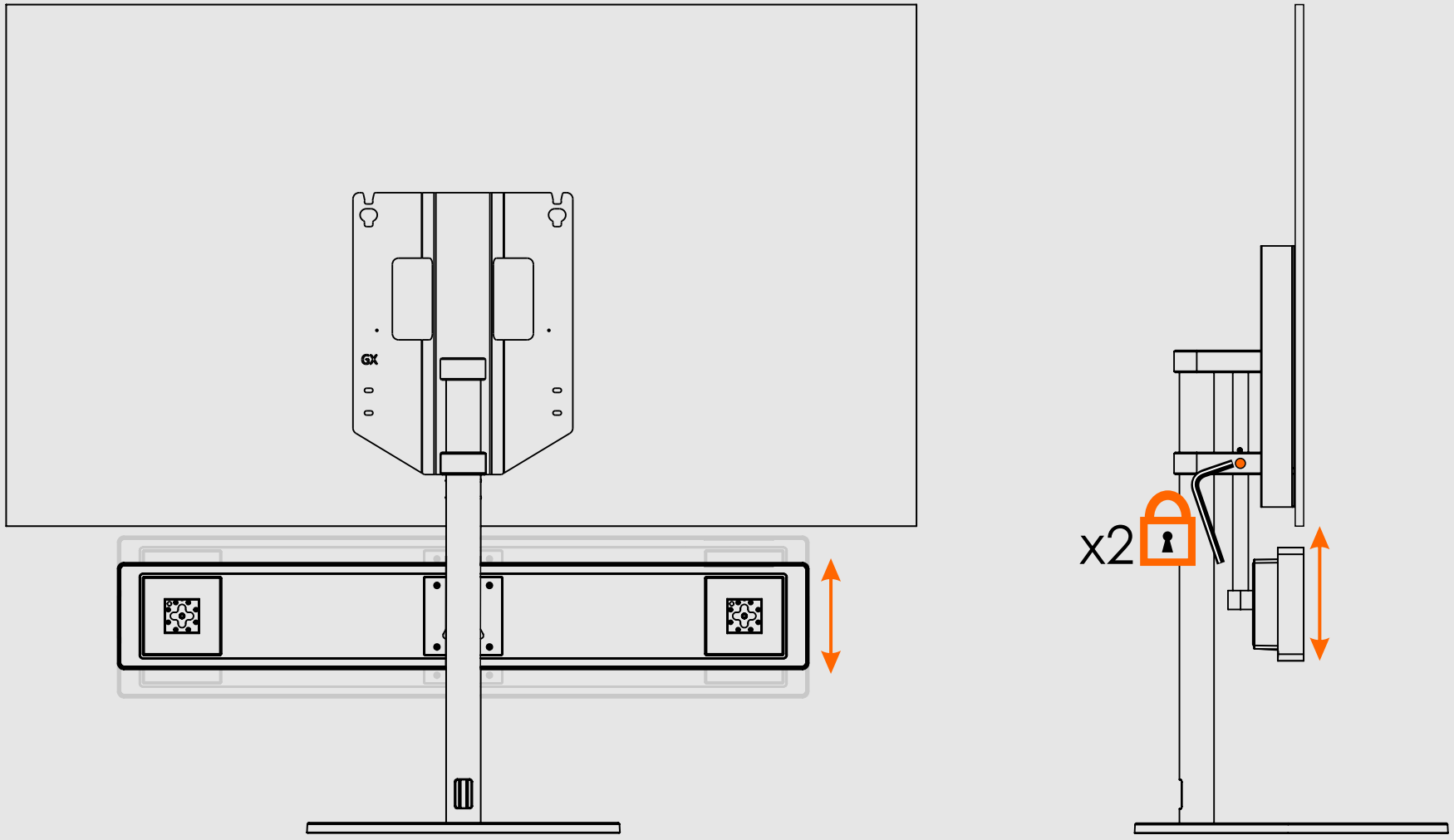

STB

LG 55/65" GX and BeoSound Stage

www.STBbrackets.co.uk
+44 1522 522400

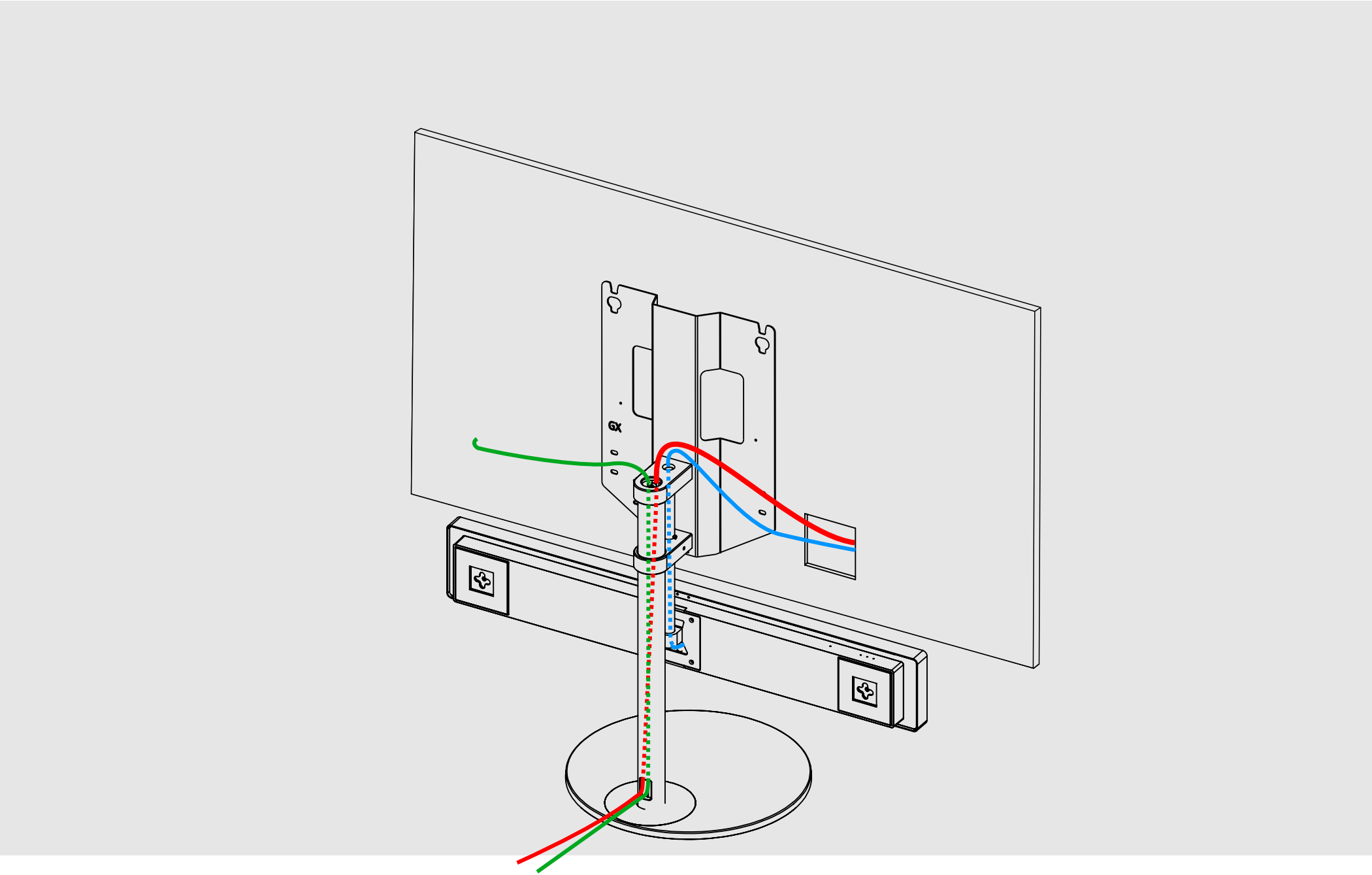

STB

LG 55/65" GX and BeoSound Stage

www.STBbrackets.co.uk
+44 1522 522400